Dynamic Liquid Cooling BoF

Nicolas Dubé, Ph.D.
Chief Strategist for HPC
nicolas.dube@hpe.com

Hewlett Packard Enterprise

Monitoring and Controls – an overview

MW

kW

W

Land of Opportunity

PowerDAM

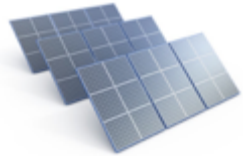

bacnet

modbus

snmp

ipmi

Power API

DMTF Redfish

PECI

RAPL

PAPI

Gap of inefficiency

GHz MHz kHz 1s 10s 100s 1h 1 day

nicolas.dube@hpe.com

Apollo 8000 System Technologies

Intelligent Cooling Distribution Unit

- 320 KW power capacity
- Scaled redundancy with row level control
- Active vacuum system monitors for leaks

Dry-disconnect servers

- 100% water cooled components
- Designed for serviceability

Management infrastructure

- HPE iLO4, IPMI 2.0 and DCMI 1.0
- Rack-level Advanced Power Manager

Warm water

- Closed secondary loop in CDU
- Isolated and open facility loop

Power infrastructure

- Up to 80kW per rack
- Four 30 - 32A 3-phase 380-480VAC

Open door view of 4 f8000, redundant iCDU racks and underfloor plumbing kit

Goldstone Monitoring

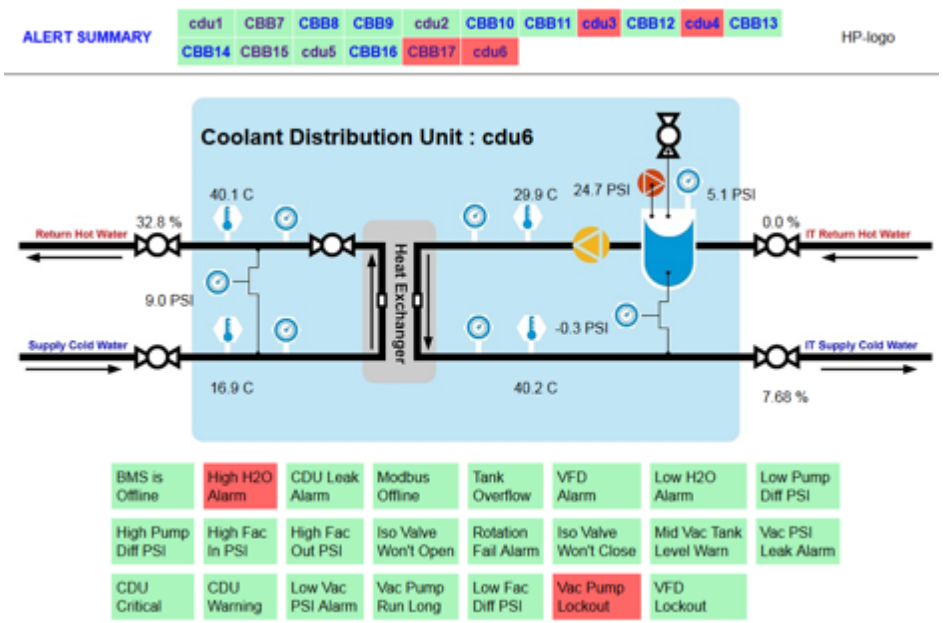

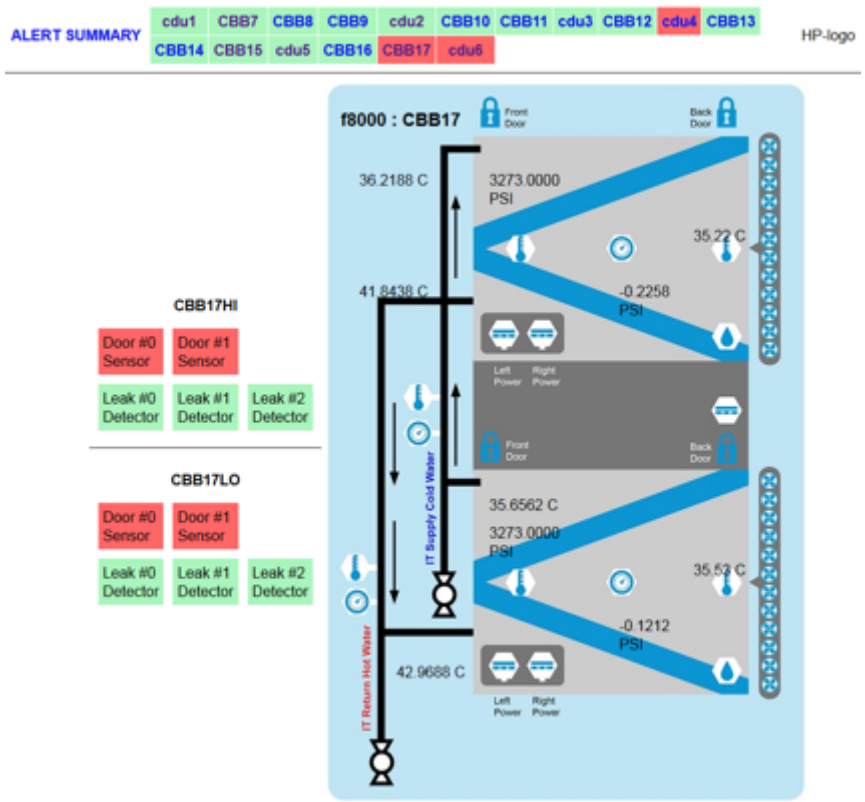

Hewlett Packard Enterprise

ESIF High Performance Computing Data Center

PUE: (lights & plugs 9.96 + cooling 2.67 + pumps 7.10 + HVAC 4.71 + IT Equipment 714.58) / IT Equipment 714.58 = **1.034**

ERE: (lights & plugs 9.96 + cooling 2.67 + pumps 7.10 + HVAC 4.71 + IT Equipment 714.58 - re-use 195.60) / IT Equipment 714.58 = **0.760**

Data Center Cooling Towers

	A	B	C	D	
fan power:	0.0	0.0	0.0	0.0	KW
water to top:	29	100	100	100	%
tower status:	ON	ON	OFF	OFF	

Thermosyphon — future

Outside Roof
Air Temperature: 7.1 C
Relative Humidity: 52.1 %

23.6 C → 16.7 C

17.9 C | 17.7 C — Tower Basin Sump Tanks

CT Pumps
602-A 2.2 KW
602-B 0.0 KW

ERW supply 18.7 C

	HX-A	HX-B	
in:	21.7	16.4	C
out:	25.2	16.7	C
flow:	0.0	160.5	GPM
status:	OFF	ON	
in:	21.8	28.9	C
out:	24.4	23.5	C
flow:	0.0	260.5	GPM

Cooling Tower Heat Exchangers

4th Floor Mechanical

as of Tue Nov 17 09:34:57 MST 2015

ceiling air: 34.3 F

Hot Air Plenum

HPC Datacenter

Peregrine Cooling Distribution Units

	10	9	8	7	6	5	4	3	2	1	
in:	23.0	23.1	23.3	23.1	24.0	24.0	23.9	22.9	18.2	18.6	C
out:	33.2	34.8	35.4	34.2	37.7	37.1	35.8	37.7	36.4	36.6	C

Rack — Hot Aisle — Rack

Energy Recovery Heat Exchanger
in: 35.7 C
out: 32.1 C
flow: 230.6 GPM
recovered: 195.6 KW

Campus H/W Heat Exchanger
in: 31.7 C
out: 35.0 C
flow: 36.4 GPM

ESIF is importing heat energy

ESIF Heating 508.1 KW

Campus Loop 312.5 KW

in: 28.9 C
out: 29.0 C
flow: 148.9 GPM

in: 67.6 C
out: 39.2 C
flow: 290.3 GPM

	DC2 South	DC1 North	
input water:	64.8	65.5	C
output water:	23.9	23.3	C
coil flow:	12.9	13.1	GPM
coil pump power:	0.4	0.4	KW
air in temp:	30.0	27.8	C
air out temp:	20.2	20.1	C
fan power:	2.1	2.1	KW
heat energy captured:	82.5	69.3	KW

Fan Walls

ERW Pumps
604-A 1.9 KW
604-B 0.0 KW

35.4 C ERW pre energy recovery

CLOSED bypass valve

28.4 C ERW post energy recovery

2nd Floor Mechanical

Next generation ultra-efficient HPC system

In production at the DoE National Renewable Energy Laboratory (NREL)

- **The first HPC data center dedicated solely to advancing energy systems integration, renewable energy research, and energy efficiency technologies**
- **New ultra-energy-efficient, petascale HPC system**
- $1 million in annual energy savings and cost avoidance through efficiency improvements
- Petascale (one million billion calculations/ second)
- Average PUE of 1.06 or better
- Source of heat for ESIF's 185,000 square feet of office and lab spaces, as well as the walkways
- 1MW of data center power in under 1,000 sq. ft. => very energy-dense configuration
- **Designed to support NREL's mission, address research challenges, reduce risks and accelerate the transformation of our energy system**.

Hewlett Packard Enterprise

HP Apollo 8000 Hikari Cluster

System Attributes

- 432 HP XL730f Trays (~432 Tflops)
  - HP XL730f E5-2690 Dual Socket
  - 64G HP 8GB 1Rx4 RDIMM
  - 120GB M.2 Storage
  - 1:1 EDR Fabric

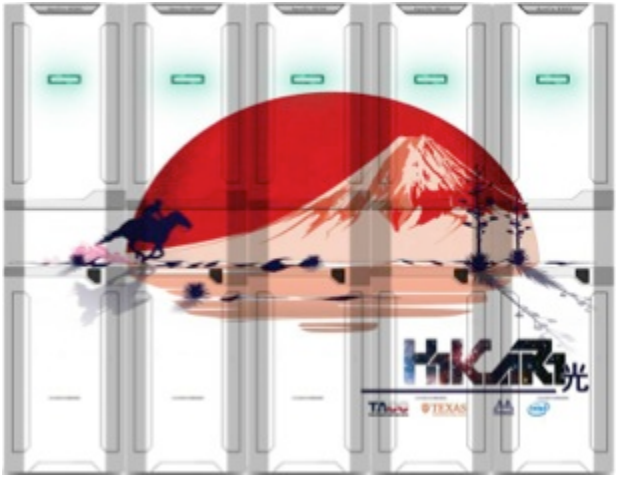

Hewlett Packard
Enterprise

Towards Carbon-Free Data Centers

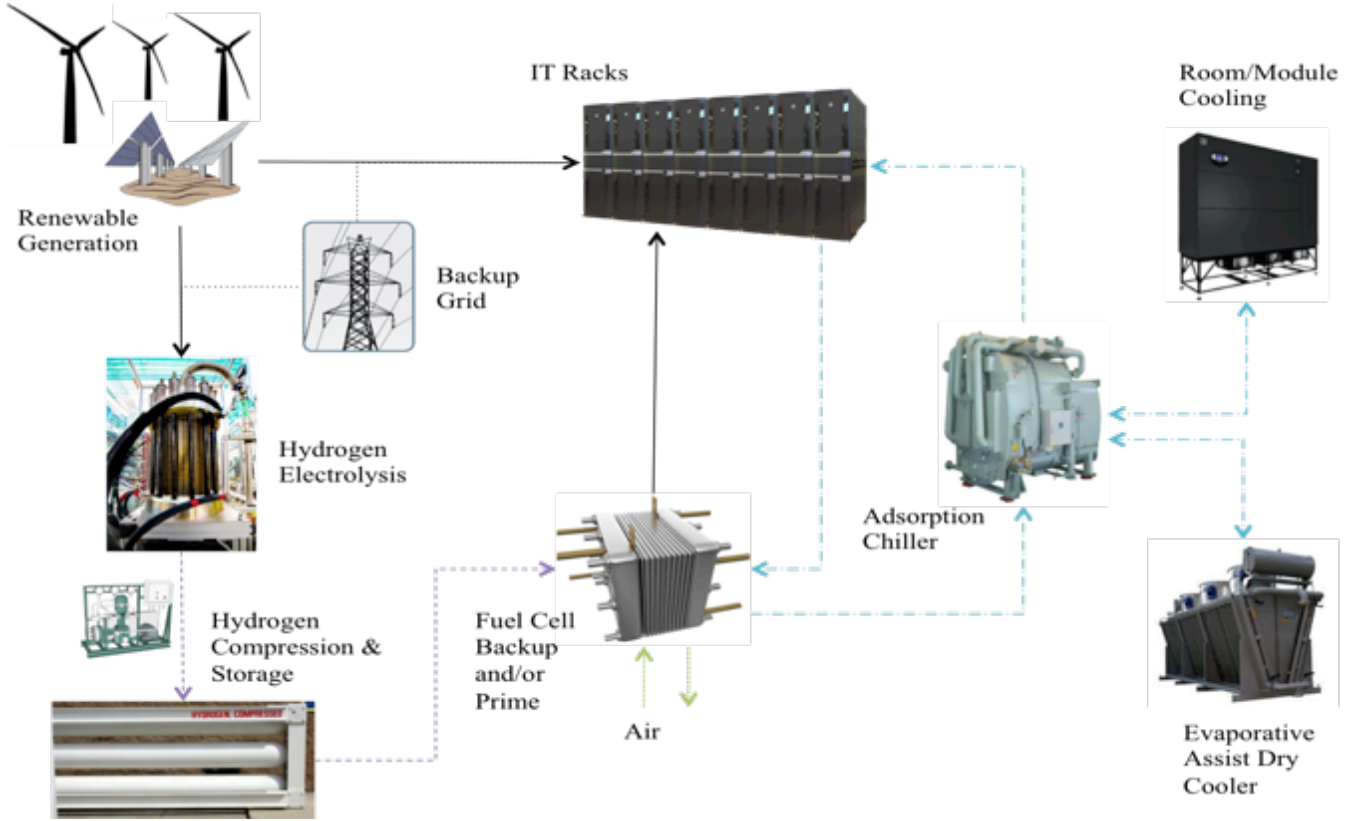

Hewlett Packard Enterprise

Source: Steve Hammond, NREL / Tahir Cader, HPe

Apollo 8000 - Most Innovative Product of 2014

US Department of Energy
2014 Sustainability Award

Hewlett Packard
Enterprise